www.WorkshopManuals.co.uk www.WorkshopManuals.co.uk

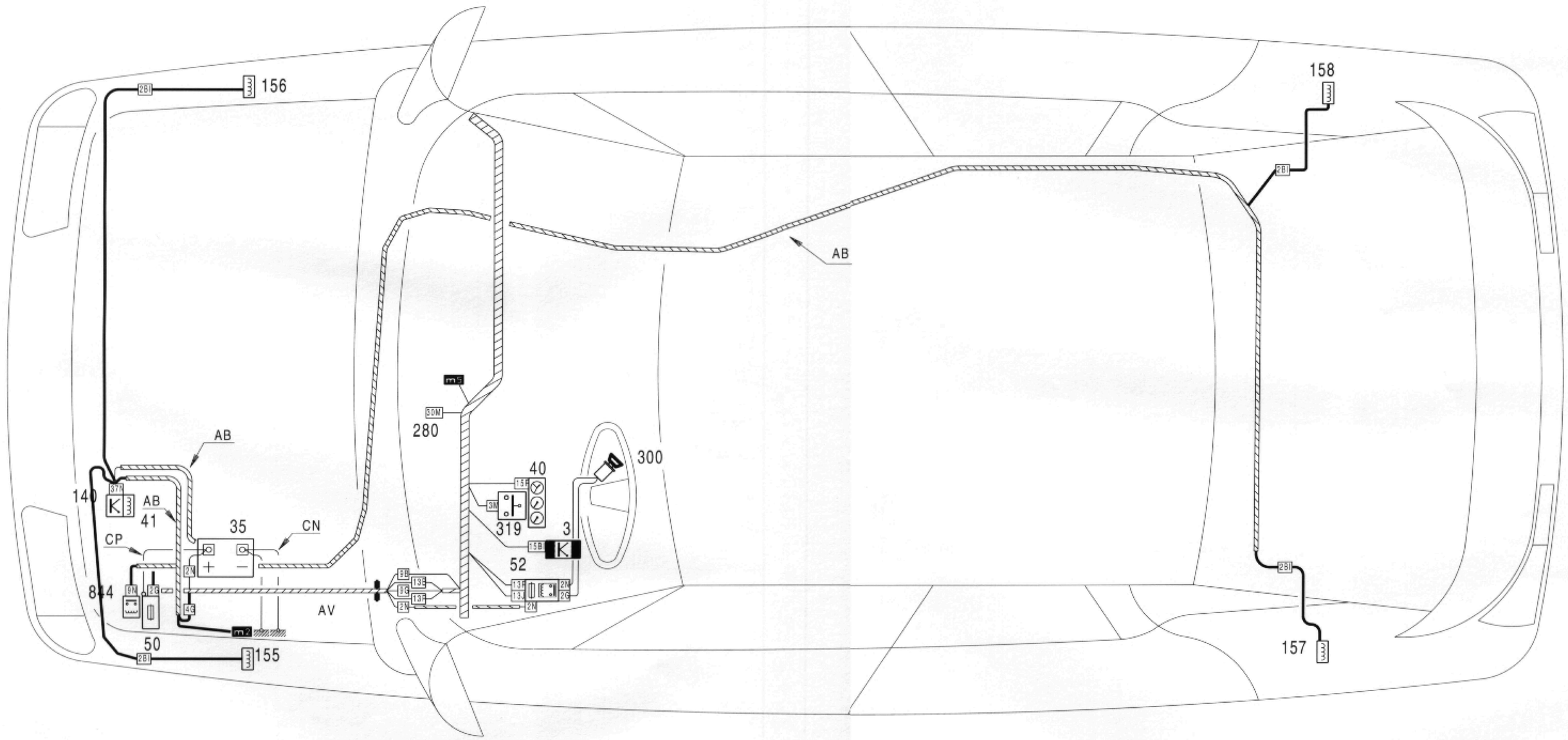
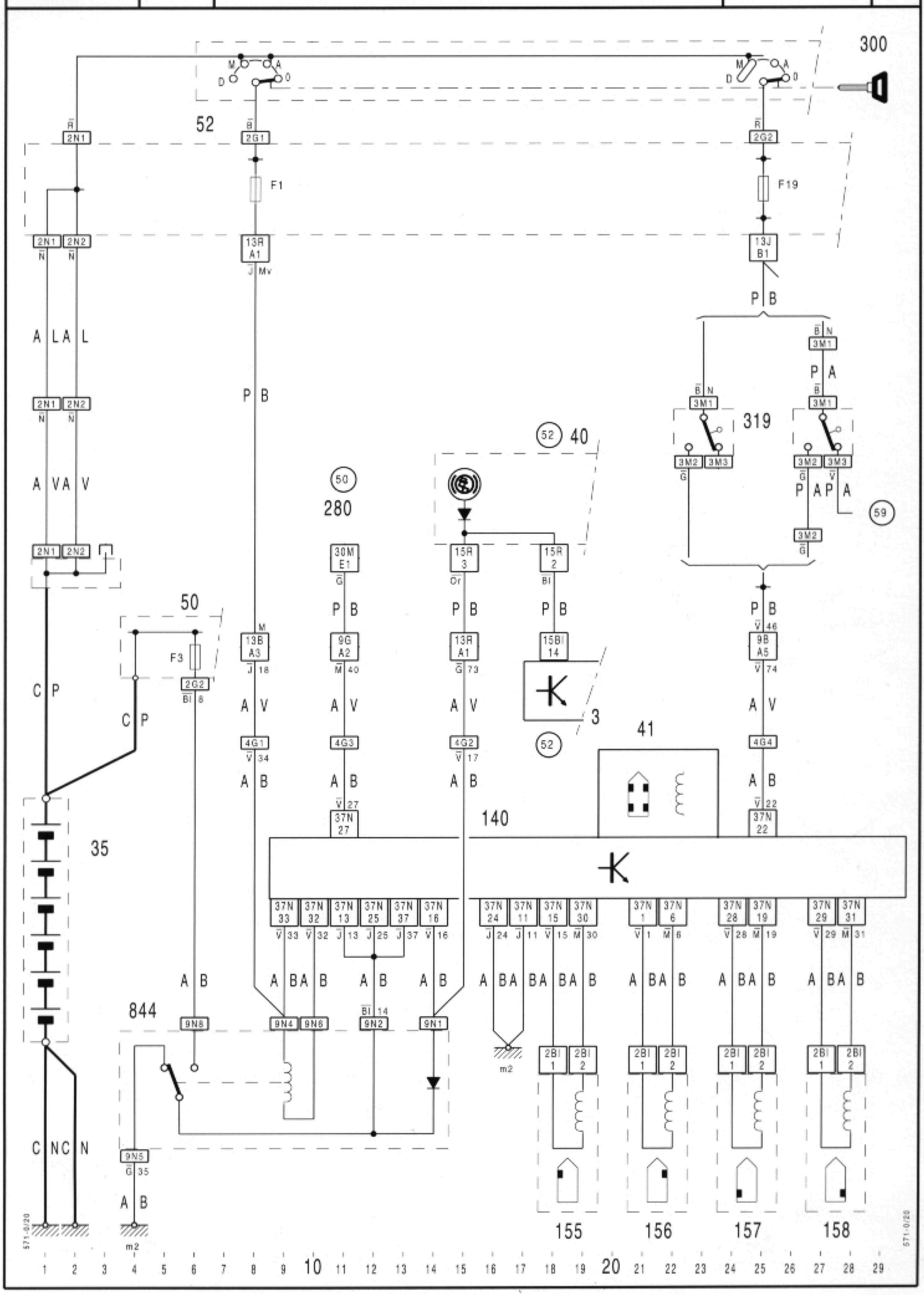
www.WorkshopManuals.co.uk